IDC-48 Installation Manual

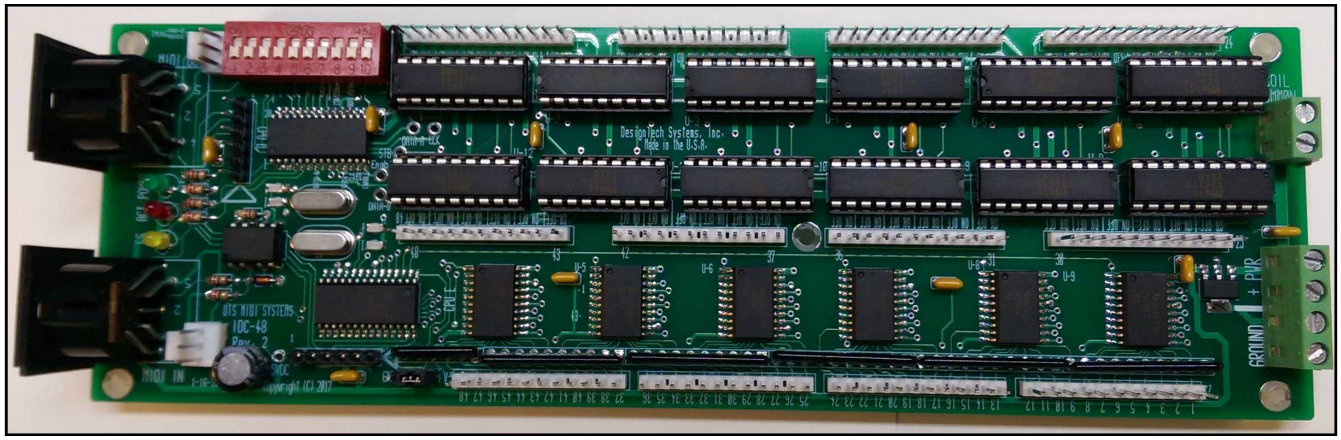

DTS Midi Systems
By
DesignTech Systems, Inc.
PO Box 828
Downers Grove, IL 60515
630-324-8199
Www.dtsmidisystems,com
info@dtsmidisystems.com

The IDC-48 is a Dual Function Midi 48 Input Encoder, Midi Decoder and Driver for up to 48 Draw Knobs and Stop Actions on a single circuit card. This eliminates two cables from each group of stops going to two separate cards, often two different locations in the console. The IDC-48 is configured for wiring with the stop actions magnets located along one side of the card and the stop action switches along the other side of the card. All connections to the card are made through plug-in style connectors.

Features of the IDC-48 include DIP Switch setting for MIDI Channel, MIDI Note Range, 150ms or 250ms Magnet ON pulse and "Auto Pulse Length". There are no configuration files to create or computer programming of the card required.

Additional Features

- Small Size, 2.7" x 8.4"
- Input Power Voltage Range, 8 to 18 Volts DC.
- Current requirement, less then 30ma.
- Crystal Controlled Microcontrollers for long term stability.
- "Auto Pulse Length", variable pulse length controlled by the stop action movement period.
- DIP Switch selectable Pulse Length, 150ms or 250ms.
- Smart Control, only sends voltage to actions that change state with combination.
- Stop Action Test Mode. Sequentially steps actions.
- Molex KK-100 series connectors with .1" pin spacing.
- Power, Activity and Auto Pulse Length LED's
- Available in Two configurations, IDC-48-Coil Positive Voltage Common and Switch, Common Ground. The IDC-48-PC– Coil Positive Voltage Common and Switch, Positive Common.

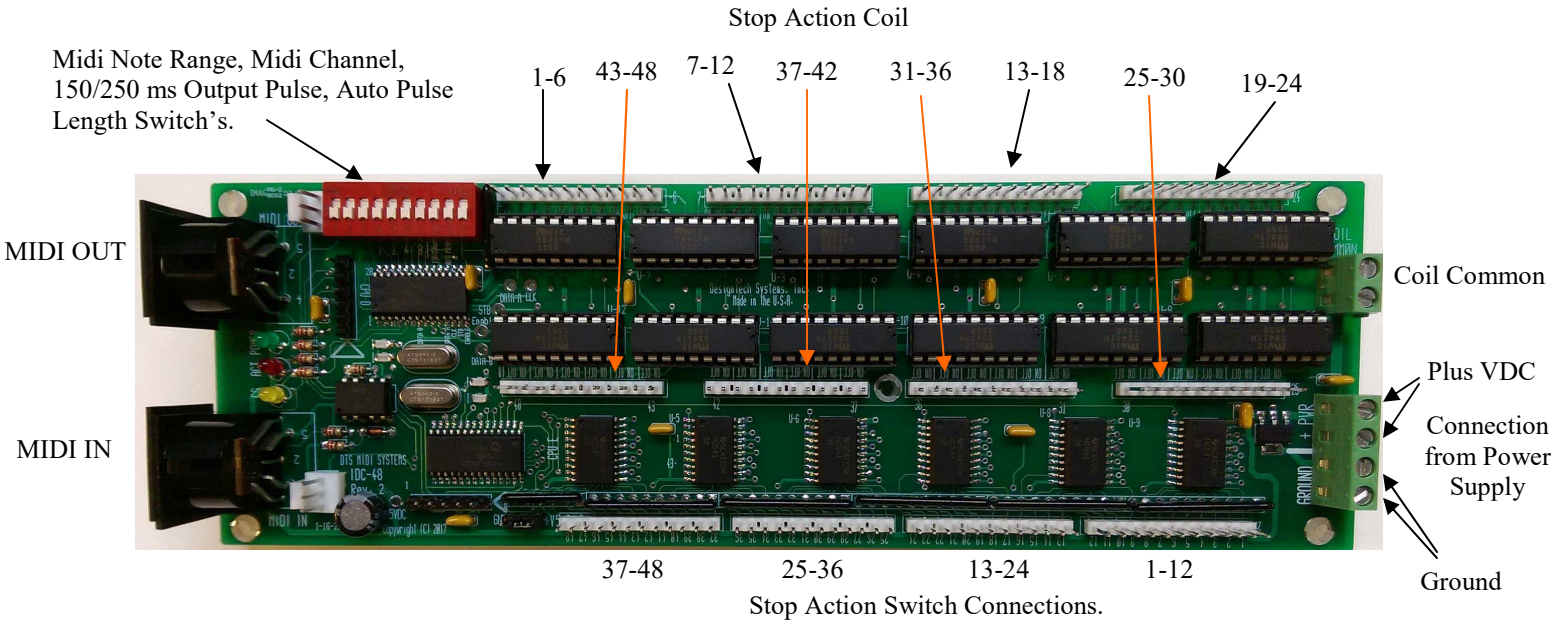

Setting up the IDC-48

The DIP Switche's control both the Encoder, Stop Action Switch and the Decoder, the Stop Action ON/OFF magnets. Refer to figure 1 for the DIP Switch location and figure 2 the switch ON and OFF position.

DIP Switch Options. There are a total of eight DIP Switch's that need to be set for operation.

- Midi Note Range, switches 1 and 2 the midi note range that the card operates on, in three ranges.
- TEST MODE, DIP Switches 1 and 2 ON will step the Actions ON and OFF in sequence.
- Midi Channel, switche's 3,4,5 and 6 set the MIDI Channel 1 to 16 for both Encoder and Decoder.
- 150ms or 250ms, switch 7 sets the magnet ON and OFF pulse to either 150ms or 250ms.
- **A**uto **P**ulse **L**ength, switch 8. This unique feature will send a pulse to the magnet ON and OFF coil for up to 500ms, based on the time it takes for the stop action switch to Close or Open. This is an ideal feature for slow operating actions, as well as reduces the ON or OFF pulse time for faster operation actions. The APL option will disable the 150/250 option when enabled.

In the switch tables below, O indicates the switch is set to OFF and X indicates the switch is set to ON.

Each MIDI Channel has a total of 128 MIDI Notes. The MIDI Note Range, which goes from Note 0 to Note 127 is divided into three Switch groups. Each group of 48 note defines the Midi notes that the Encoder sends when a stop action switch closure occurs and also controls the stop action when a midi message is received from Hauptwerk.
If the Note Range is set to the first group, the first stop action magnets connected to Number 1 ON/OFF outputs and the actions switch connected to the number 1 encoder input, would send and receive MIDI Note 0. The second action connected to the second outputs and input would be MIDI Note 1. For proper operation, when connection a stop action, the OUTPUT DRIVER SET Number MUST Match the Encoder Input terminal.
The three Range Groups also allows up to three IDC-48 cards to be set to the same MIDI Channel.

The **TEST MODE** function, switches 1 and 2 ON, will cause the draw knobs or stop actions to step on and off is sequence. This will tell if the actions are wired correctly and function properly.

	Sw 1	Sw 2
Notes 0-47	O	O
Notes 48-95	O	X
Notes 96 to 127	X	O
Action Test Mode	X	X

Channel	Sw 3	Sw 4	Sw 5	Sw 6
1	X	O	O	O
2	O	X	O	O
3	X	X	O	O
4	O	O	X	O
5	X	O	X	O
6	O	X	X	O
7	X	X	X	O
8	O	O	O	X
9	X	O	O	X
10	O	X	O	X
11	X	X	O	X
12	O	O	X	X
13	X	O	X	X
14	O	X	X	X
15	X	X	X	X
16	O	O	O	O
	1	**2**	**4**	**8**

	Sw 7	Sw 8
Auto Pulse Length On, Sw 8	O	O
Auto Pulse Length Off, Sw 8	O	X
250 ms Pulse, Sw 7	X	O
150 ms Pulse, Sw 7	O	O

Showing the Switch in the OFF position.

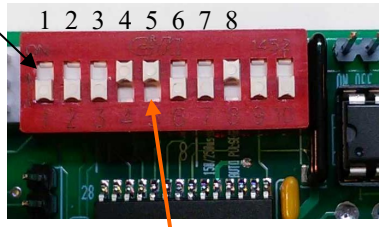

Showing the Switch in the ON position.

Connecting the IDC-48

There are four types of connections that need to be made to and from the IDC-48.

1. Connections to the stop actions On and Off Magnets.
2. Connection to the stop actions switch.
3. Power and Ground connection to the Power Block.
4. MIDI In and MIDI Out cables.

<u>On Off Magnet Connections</u>

The magnet connections are divided into two groups, 1 –24 along the edge of the card and 25 to 48 located in the center of the card. Within each group the pins are further divided into groups of 2 pins each, Magnet ON and Magnet OFF, starting with group 1, pins 1-ON and 2-OFF for the first action. Pins 3-ON and 4-OFF for the second action. For proper operation, each Stop ON-OFF set connection set must be matched with the corresponding Switch Input connection.

Wire gage ranging from 24 to 28 solid can be used.
The Magnet Coil Commons are connected to the Plus Voltage line Terminal Block located on the IDC-48 and the IDC-48-PC
.

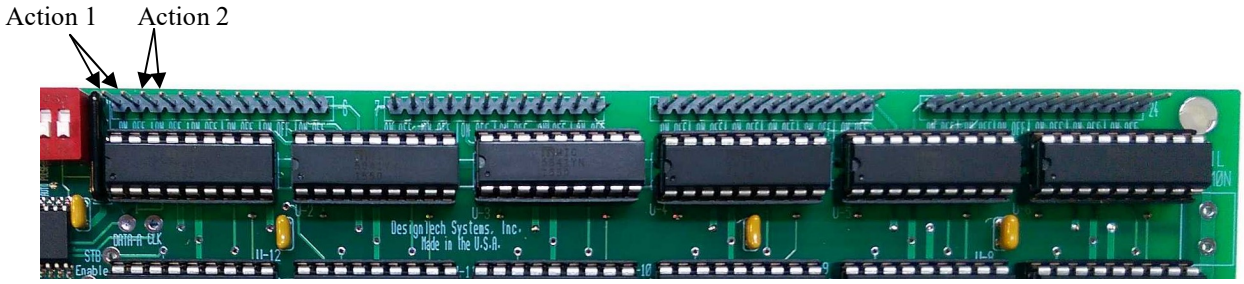

<u>Stop Actions Switch Connection</u>

The switch inputs are located along the edge of the card and are marked 1 through 48. For proper operation, the switch connection terminal <u>must match</u> the magnet terminal set. Magnet set 1 goes with switch terminal 1, magnet set 2 with switch terminal 2 and so on. Wire gage ranging from 24 to 28 solid can be used.

The stop action switch common buss can be either Ground when connecting to the IDC-48 card or Positive when connecting to the IDC-48-PC card.

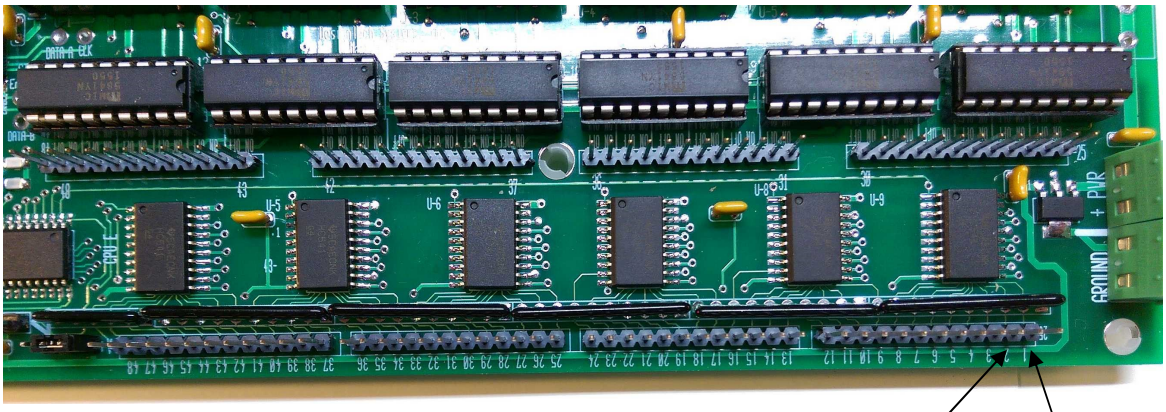

MIDI Connections To and From the Computer and Hauptwerk

Due to the large amount of midi data flowing in and out of two or more IDC-48 controllers, a 4x4 or larger MIDI to USB interface is required for proper operation of the IDC-48's. Each IDC-48 Midi In and Out Port should be connected to a single Midi In and Out port on the Midi to USB interface as displayed below.

After a MIDI to USB interface has been selected, the Interface drivers need to be installed in the computer before Hauptwerk will detected the interface. In most cases, the computer will need to be restarted before Hauptwerk will detect the interface. See page 6 for midi port selection in Hauptwerk.

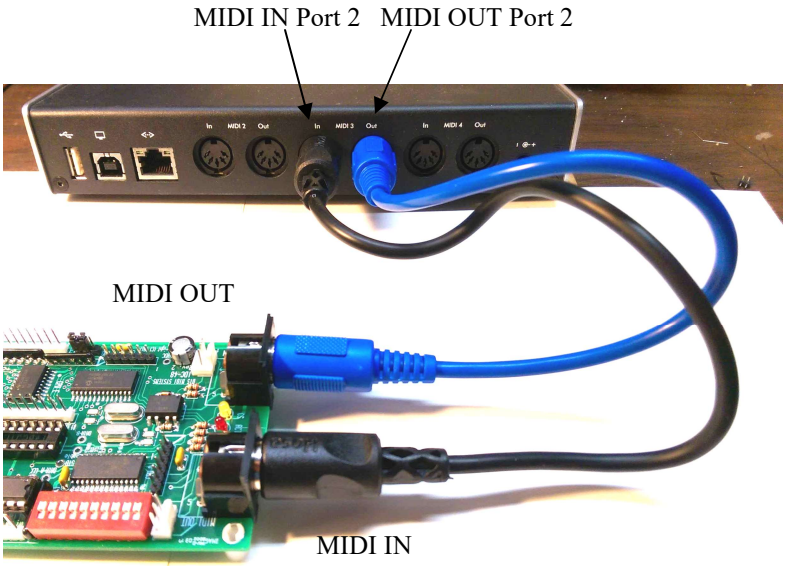

Connecting to Hauptwerk

Before an organ can be loaded, the following change will have to be made in the "General Preference" menu due to the midi loop caused by the Midi In and Midi Out connections.

1. Go to General Settings located on the menu bar.
2. Select "General Preferences".
3. Select "Advanced preferences".
4. Locate "Don't halt if MIDI feedback detected" and CHECK the box.
5. Click on the OK button.

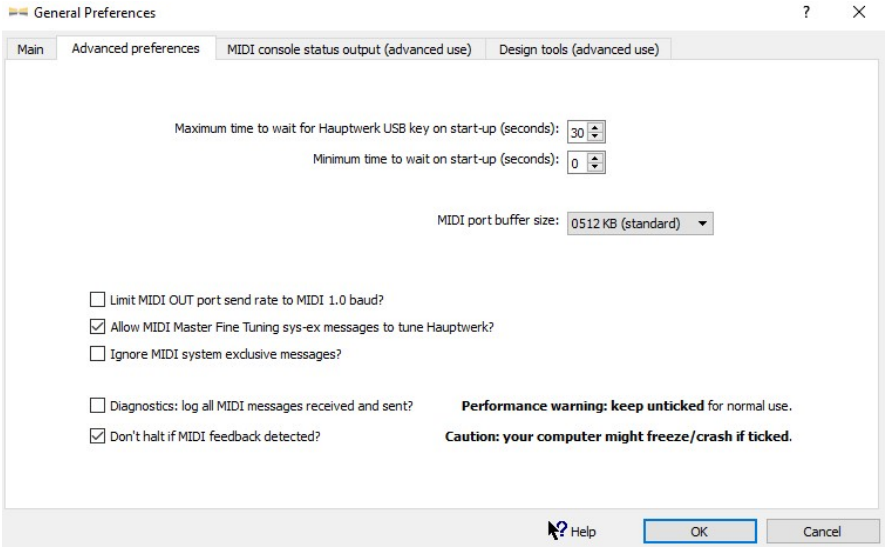

Loading and Installing an Organ

The next is to load an organ by locating the “Organ” on the menu bar, than “Load Organ” and selecting an organ sample that has been installed. After the organ has loaded, the following will need to be checked.

1. Go “General settings” on the main menu bar.
2. Select “MIDI ports”.
3. The MIDI IN ports and MIDI OUT ports screen will come up showing the MIDI to USB interface ports that are available.
4. Check the INPUT and OUTPUT ports that are connected to the IDC-48 card or cards, as well as the other midi cards in the organ.
5. Click the OK button with finished.

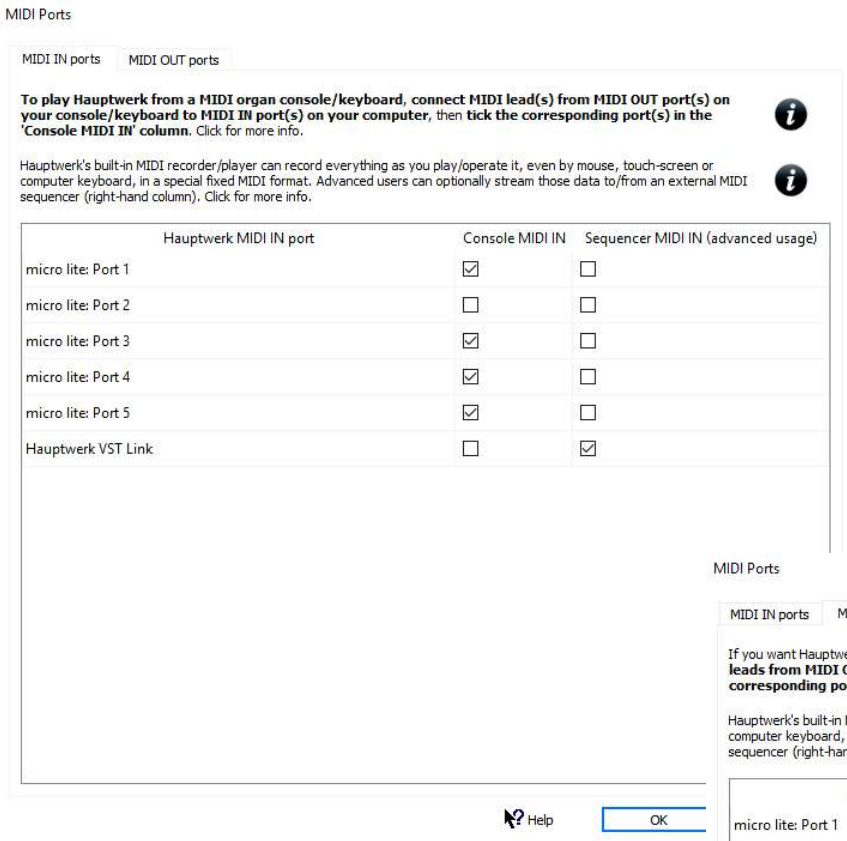

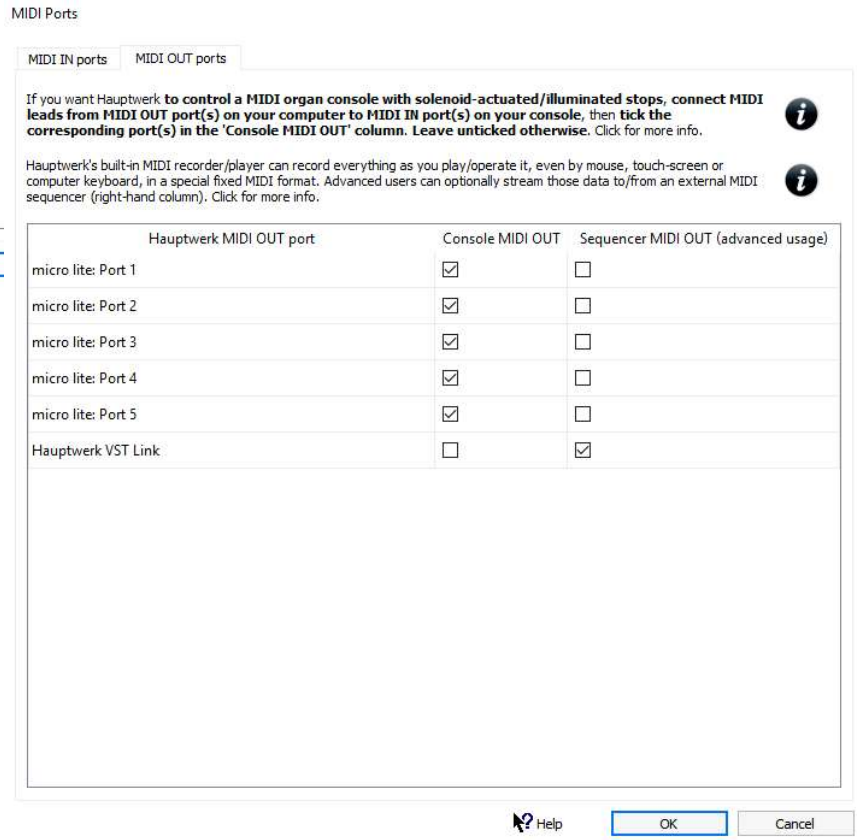

Detecting Stops

The final steps in configuring the organ are setting the Stops by the following.

1. Select a Stop on the screen that matches the Stop Action on the console, for instance the 8’ Diapason.
2. On the screen, right click on the stop.
3. Select “Auto-detect”.
4. Move the Stop Action ON and than OFF.
5. Check “Send matching MIDI output to control this MIDI draw-knob/tab/switch?”
6. On the MIDI OUTPUT port: select the port that the IDC-48 is connect to.
7. Click the Done button.

After the first stop setting, items 5 and 6 will not have to be repeated. Proceed to Auto Detect the remainder of the stop actions. Moving the Screen Stop should cause the console stop to turn ON and OFF. Moving the Console stop should result in the screen stop turning ON and OFF.

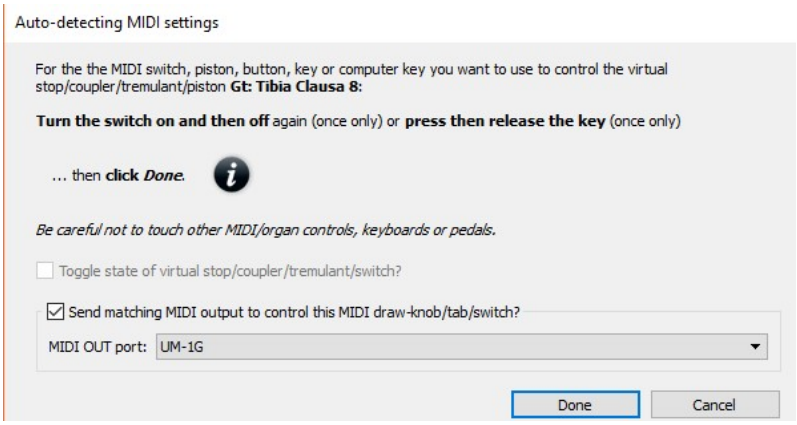

Checking the Status of a Stop Action.

To verify the stop action setup information, MIDI Channel, MIDI Note, Input and Output function, right click on the screen stop and select “Adjust MIDI/trigger settings manually for stop”

The stop information screen will appear which will show the midi INPUT and OUTPUT information. Going to the OUPUT screen, the console stop and be tested by clicking the TEST: “ON” and the TEST: “OFF” buttons. Click OK to complete the setup.

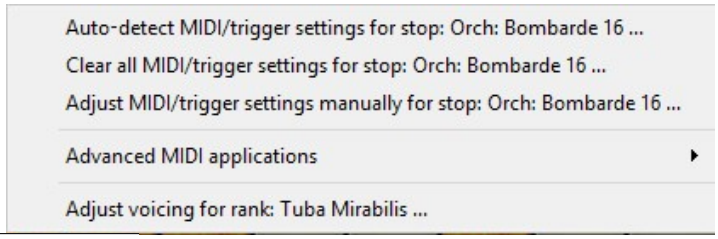

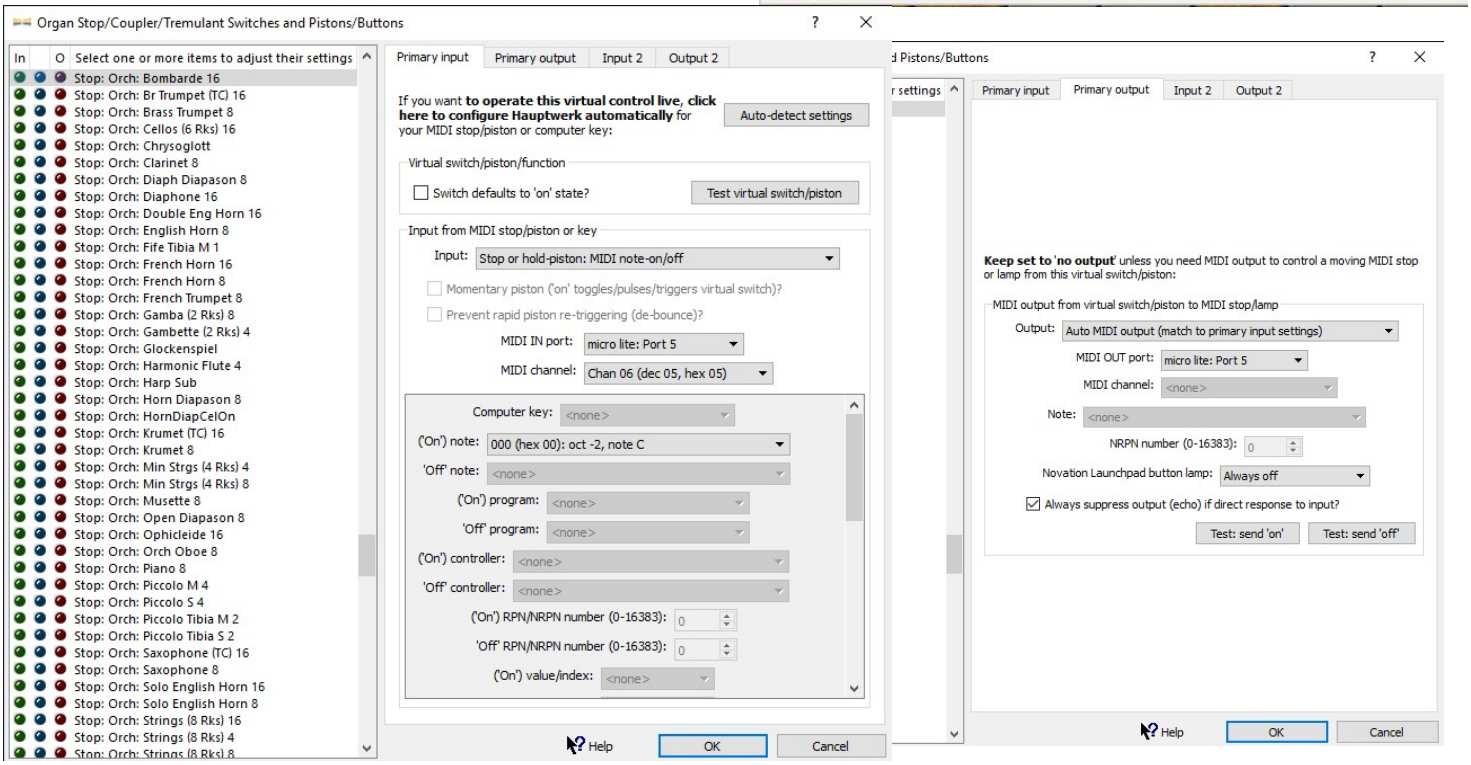

CONNECTIONS FOR IDC-48PC

The following instructions for connecting Draw Knobs and SAM's with Plus Common for the Coils and Switch to the IDC-48PC.

1. The Action Frame is common to the COILS and Switch Wiper and should be connected to the PLUS voltage line GREEN TWO TERMINAL BLOCK, marked COIL COMMON.
2. The coil input terminals should be connected to Output Pins as described on Page 4.
3. The Switch Terminal connected as describe on Page 4.

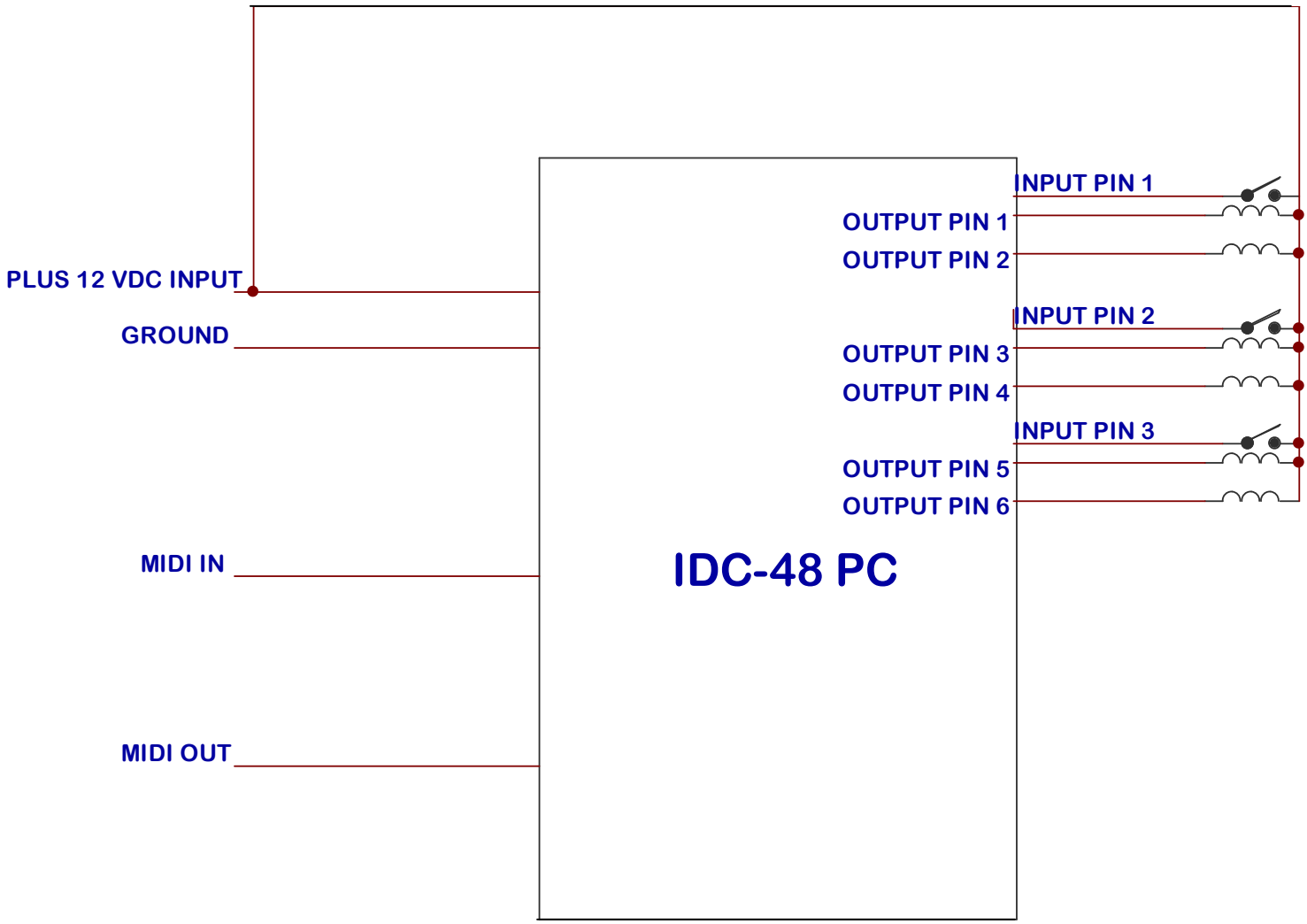

IDC-48-NC

The IDC-48-NC is designed to interface with drawknobs and SAM's that have the Action Coils Common and the Switch Common terminal connected to Ground either by the action frame or terminals. The Driver Outputs are connected to the coil in terminal and pulls to PLUS voltage to actuate the action. When the action is ON the switch output terminal is connected to GROUND by the switch common or wiper terminal.

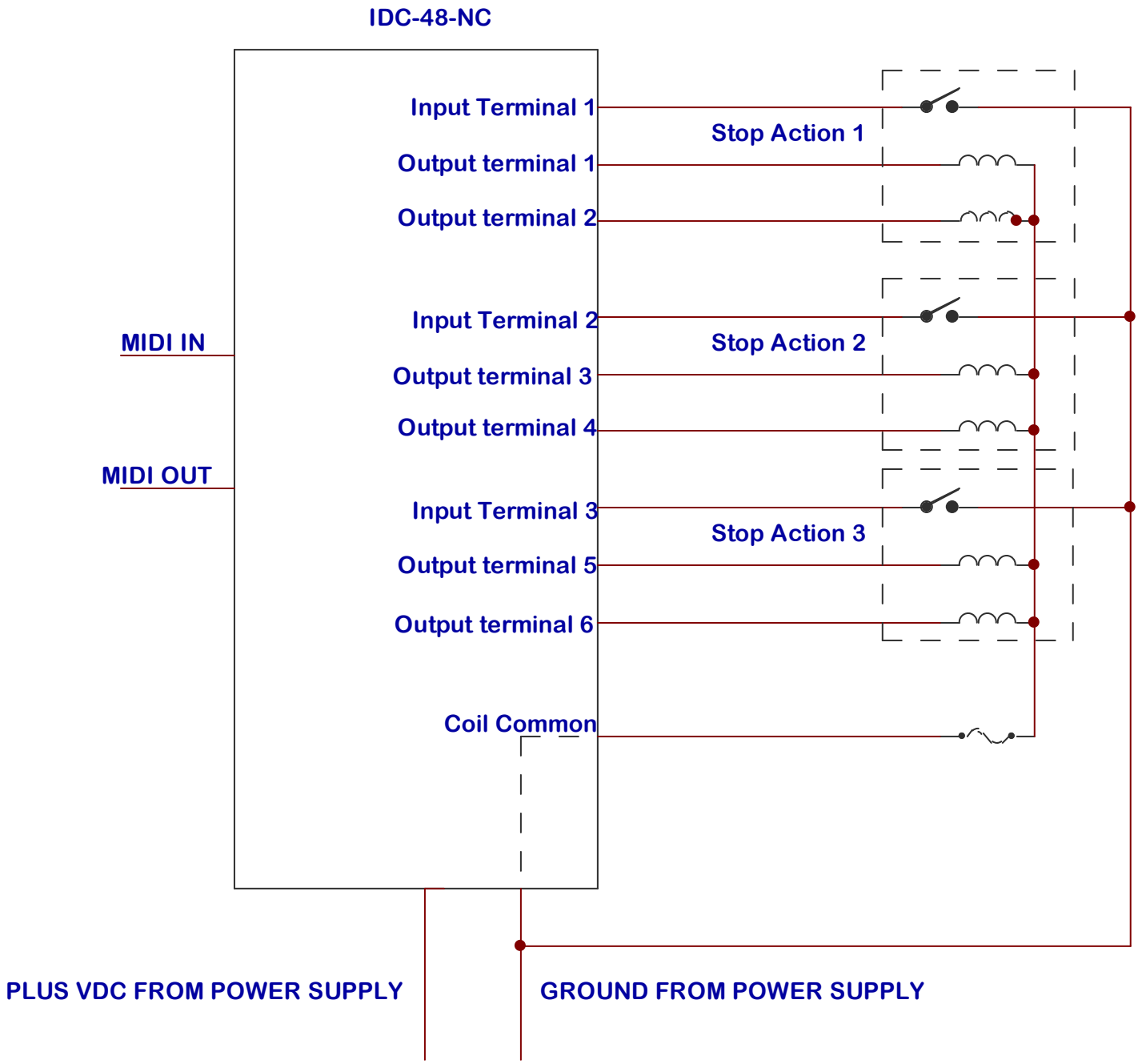

1-YEAR UNCONDITIONAL WARRANTY
DTS Midi Systems
Manufactured by DesignTech Systems, Inc.

"DTS Midi Systems" products are warranted against defects for one year from date of purchase from DTS Midi Systems, an authorized distributor and dealers. Within the one year period, "DTS Midi Systems" products will be repaired or exchanged (at our option) without charge for parts or labor. Simply return your intercom along with proof of purchase, return postage of $10.00 (within USA) and it will be repaired or replaced within one week. Warranty does not cover transportation cost or product misuse, accidental damage, owner tampering or reworking.

You use the purchased items at your own risk. We are not responsible for any damages, injuries, copyright violations, financial losses or other similar due to the consequence of the use or misuse of the purchased goods.

You can return your order within 3 days of receipt if it has been damaged during delivery, we will ship you a replacement item at our expense.

The items can be returned for a full refund within 3 days if it has not been damaged or misused after delivery.

Except as provided herein, DesignTech Systems, Inc makes no warranties, expressed or implied, including warranties or merchantability and fitness for a particular purpose.

NOTE: Some states do not permit limitations or exclusions of implied warranties, therefore, the aforesaid limitations (s) may not apply to the purchaser.

DesignTech Systems, Inc.
Downers Grove, IL 60515 USA
630-324-8199
Email: info@dtsmidisystems.com